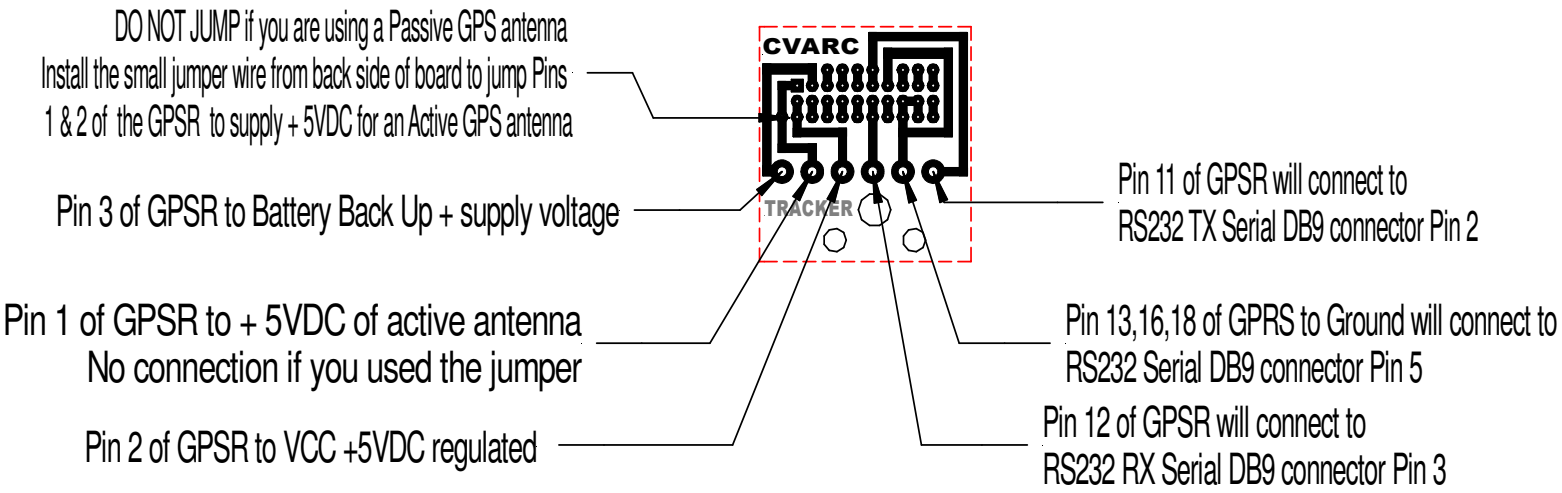
DO NOT JUMP if you are using a Passive GPS antenna
Install the small jumper wire from back side of board to jump Pins
1 & 2 of the GPSR to supply + 5VDC for an Active GPS antenna
CVARC
TRACKER
Pin 3 of GPSR to Battery Back Up + supply voltage
Pin 1 of GPSR to + 5VDC of active antenna
No connection if you used the jumper
Pin 2 of GPSR to VCC +5VDC regulated
Pin 11 of GPSR will connect to
RS232 TX Serial DB9 connector Pin 2
Pin 13,16,18 of GPRS to Ground will connect to
RS232 Serial DB9 connector Pin 5
Pin 12 of GPSR will connect to
RS232 RX Serial DB9 connector Pin 3